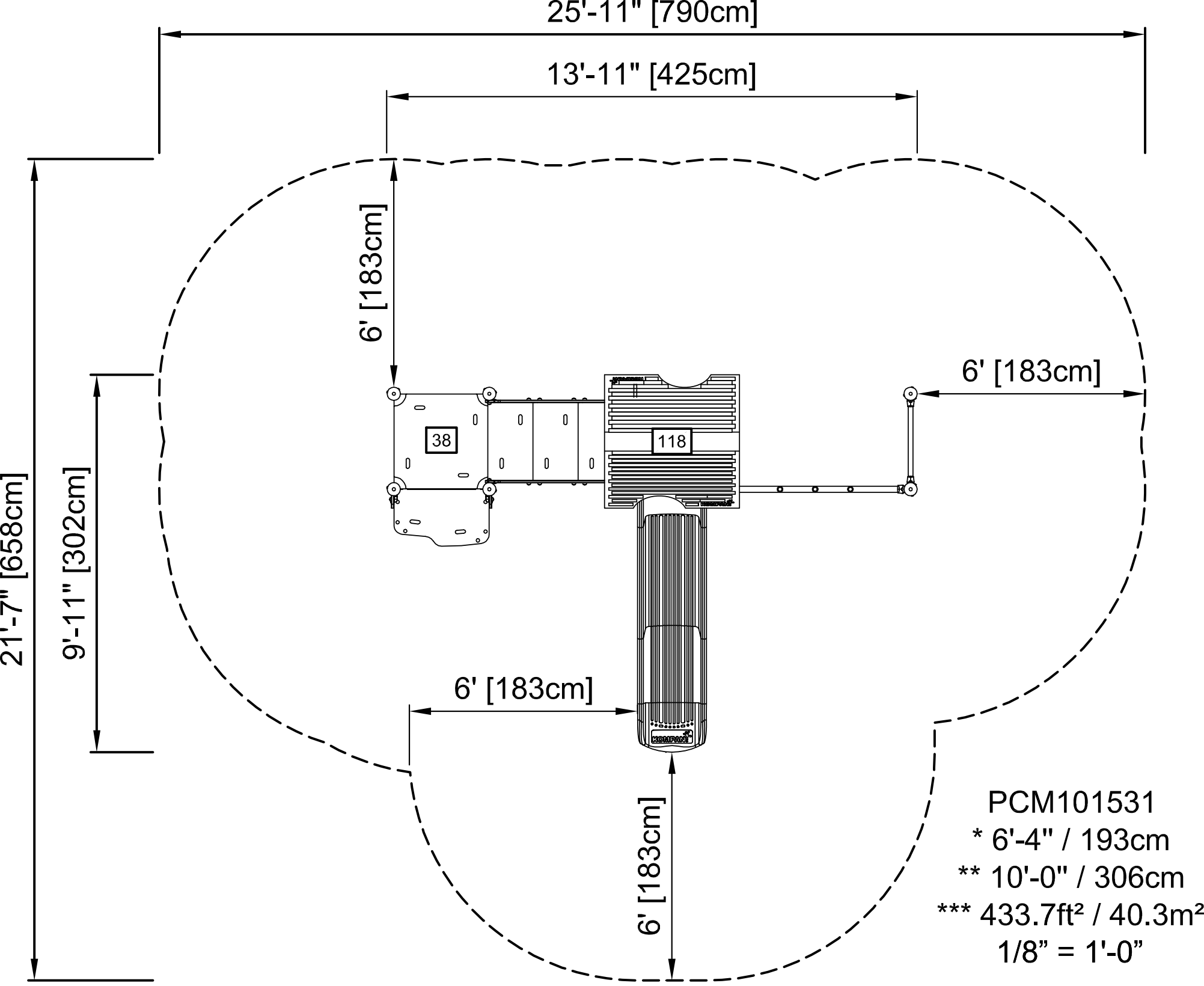
25'-11" [790cm]
13'-11" [425cm]
6' [183cm]
6' [183cm]
21'-7" [658cm]
9'-11" [302cm]
38
118
6' [183cm]
6' [183cm]
PCM101531
* 6'-4" / 193cm
** 10'-0" / 306cm
*** 433.7ft² / 40.3m²
1/8” = 1'-0”